LI-ION technology

Electric tow tractor

EZS 7280

Capacity: 28000 kg

JUNGHEINRICH

EZS 7280

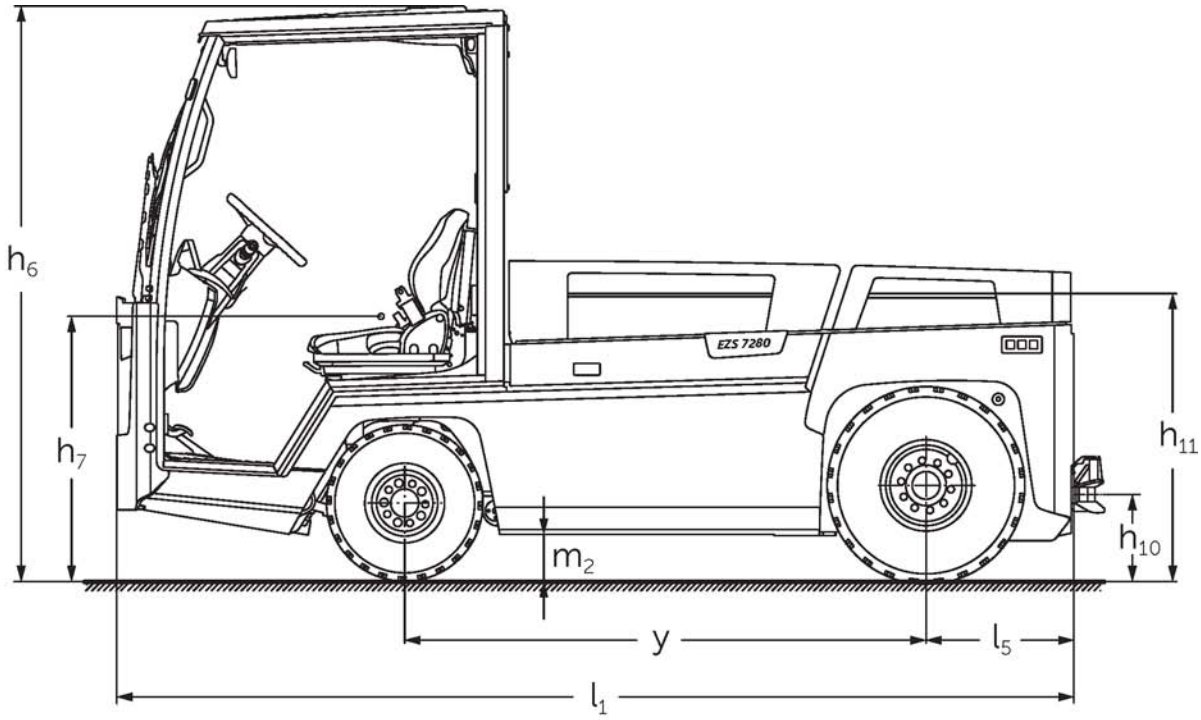

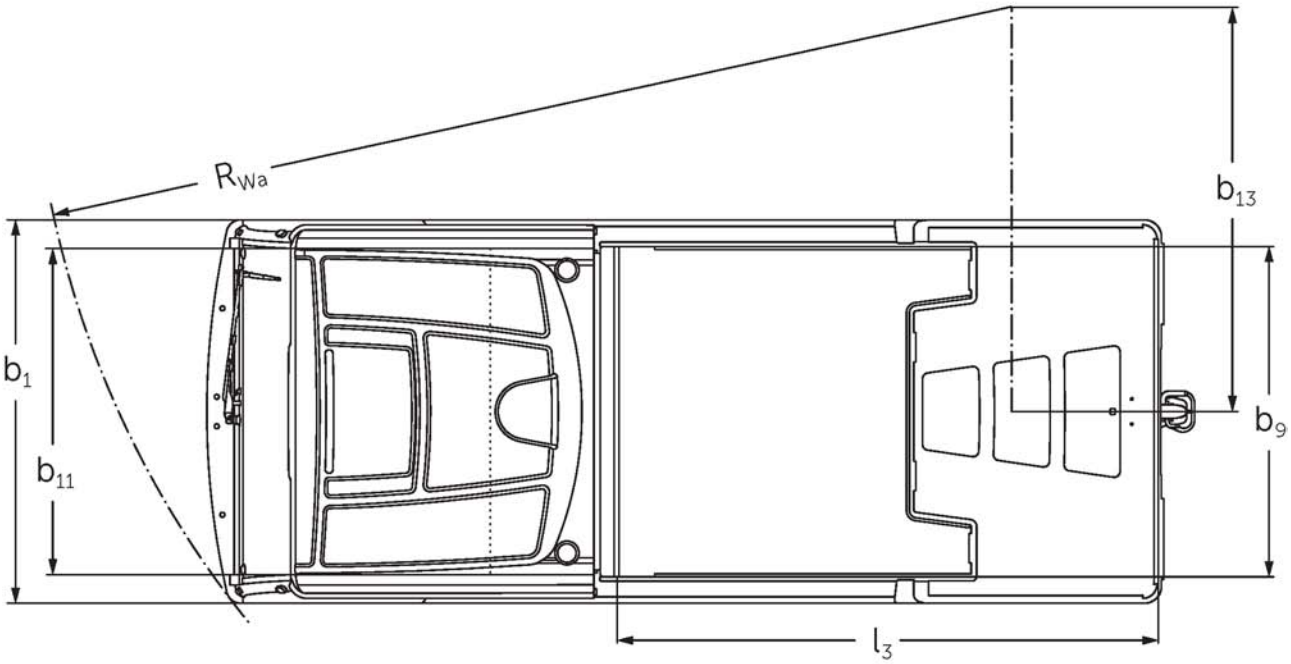

EZS 7280

Pulling ability

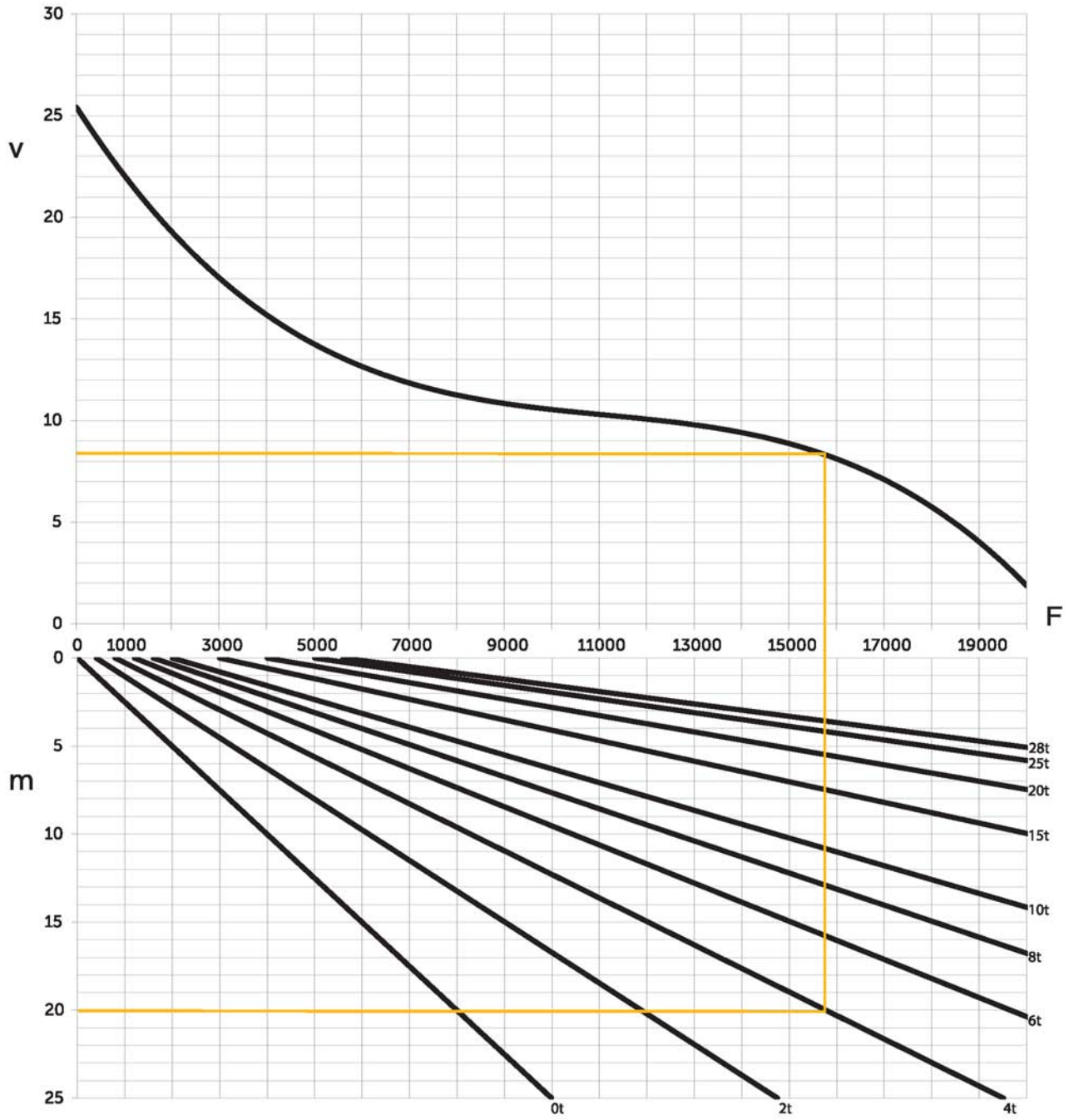

v=speed [km/h], m=incline [%], F=drawbar pull [N]

VDI table

Stand-on: 05/2020

Characteristic	1.1	Manufacturer (abbreviated description)			Jungheinrich	
	1.2	Manufacturer's type designation			**EZS 7280**	**EZS 7280 XL**
	1.3	Drive			Electric	
	1.4	Operation			Seat	
	1.5	Capacity/load	Q	kg	28.000	
	1.7	Rated drawbar pull		N	5.600	
	1.9	Wheelbase	y	mm	1.465	1.755
Weights	2.1.1	Service weight (incl. battery)		kg	4.088	4.796
	2.3	Axle load unladen front/rear		kg	2.100 / 1.988	2.446 / 2.350
Wheels/suspension system	3.1	Tyres			SE / pneumatic	
	3.2	Tyre size, front			6.00 R9	
	3.3	Tyre size, rear			7.00 R12	
	3.5	Wheels, number front/back (x=driven)			2 / 2 x	
	3.6	Tread width, front	b_{10}	mm	1.070	
	3.7	Tread width, rear	b_{11}	mm	1.070	
Basic dimensions	4.7	Height of overhead guard (cab)	h_6	mm	1.970	
	4.8	Seat height/stand height	h_7	mm	880	
	4.12	Coupling height	h_{10}	mm	295	
	4.13	Loading height, unladen		mm	1.000	
	4.16	Loading area length		mm	1.500	1.880
	4.18	Loading area width		mm	1.090	
	4.19	Overall length	l_1	mm	3.000	3.300
	4.21.1	2. Overall width (b2)	b_1	mm	1.300	
	4.32	Ground clearance centre of wheelbase	m_2	mm	150	
	4.35	Turning radius	W_a	mm	2.825	3.275
	4.36	Smallest pivot point distance	b_{13}	mm	935	1.095
Performance data	5.1	Travel speed laden/unladen		km/h	12 / 25	
	5.5	Drawbar pull laden/unladen		N	5.600 /	
	5.6	Max. drawbar pull laden/unladen		N	19.000 /	
	5.10	Service brake			hydraulic/electric	
E-motor/ Electronics	6.1	Drive motor, performance S2 60 min		kW	20	
	6.4	Battery voltage / nominal capacity		V / Ah	80 / 620	80 / 930
	6.5	Battery weight		kg	1.560	2.180
Miscellaneous	8.1	Type of drive control			AC	
	10.7	Sound level as per EN12053, operator's ear		dB (A)	60	

- In accordance with VDI Guideline 2198 this data sheet provides details of the standard truck only. Non-standard tyres, different masts, optional equipment, etc. may result in different values.

- 5.1: 13 km/h with 25 t trailer load. - 10.7: With deactivated ventilation/heating.